STERIS®

HARMONY® LED SURGICAL LIGHTING AND VISUALIZATION SYSTEM

APPLICATION

The Harmony LED Surgical Lighting and Visualization System is a variable pattern, variable intensity surgical lighting fixture designed to provide visible illumination of the surgical field or the patient for the operating room staff. The system also facilitates monitor mounting and transmission of video and control signals.

This product may contain communications devices. A medical image communications device provides electronic transfer of medical image data between medical devices. It may include a physical communications medium, modems, interfaces, and a communications protocol.

Harmony LED 785 and Harmony LED 585 Lightheads with Dual Flat Panel Monitor Arm

(Typical only - some details may vary.)

The Selections Checked Below Apply To This Equipment

LIGHTHEADS/ILLUMINANCE

- ❑ Harmony LED 585 / 160,000 lux (14,800 fc)
- ❑ Harmony LED 785 / 160,000 lux (14,800 fc)

COMMON LIGHTING SYSTEM CONFIGURATIONS

NOTE: Select lightheads above for configuration selected below.

- ❑ **One Harmony Lighthead (LED 585):** Center Mounted on One 44" Horizontal Arm with Hub Spacer.
- ❑ **Two Harmony Lightheads (LED 585):** Center Mounted on One 36" Horizontal Arm (LED 585) and One 44" Horizontal Arm (LED 585).
- ❑ **Two Lighthead System with Four Monitors** Center Mounted on One 49" Dual Flat Panel Monitor Arm, One 44" Light Arm (LED 585), One 36" Light Arm (LED 785) and One 47" Dual Flat Panel Auxiliary Monitor Arm.
- ❑ **Three Lighthead System (Two LED 585/One LED 785):** Center Mounted on One 36" Horizontal Arm (LED 585) and Two 44" Horizontal Arms (LED 585 & LED 785) or, alternatively, Two Harmony LED Lightheads Center Mounted on One 36" Horizontal Arm (LED 585) and One 44" Horizontal Arm (LED 785) and the Second Center Mount with One Harmony LED 585 Lighthead on One 44" Horizontal Arm and Hub Spacer (Remote Power Module required)
- ❑ **Three Lighthead System (Three LED 585):** Center Mounted on One 36" Horizontal Arm and Two 44" Horizontal Arms or, alternatively, Two Harmony LED Lightheads Center Mounted on One 36" Horizontal Arm and One 44" Horizontal Arm and the Second Center Mount with One Harmony LED Lighthead on One 44" Horizontal Arm and Hub Spacer (Remote Power Module required)
- ❑ **Four Lighthead System (LED 585/LED 785; on two mounts):** First Center Mount: Two Harmony LED Lightheads, Center Mounted on One 36" Horizontal Arm (LED 585), and One 44" Horizontal Arm (LED 785); Second Center Mount: Two Harmony LED Lightheads, One 44" Horizontal Arm (LED 785), and One 36" Horizontal Arm (LED 585) (Remote Power Module required)

Harmony LED CONTROL CENTER

- ❑ Standard Mount
- ❑ Low Profile (Recessed)
- ❑ Remote Power Module (used in combination with Standard Mount or Low Profile Control Centers for controlling up to four lightheads)

FIBER OPTIC CONFIGURATION

- ❑ Standard Yoke
- ❑ Modem Chassis Complete
- ❑ Modem Chassis (No Backplane)

MODEMS (Transmitter/Receiver Pairs)

- ❑ S-Video/Composite/Audio
- ❑ VGA/RGBHV
- ❑ HD-SDI
- ❑ DVI-D (Single link)

OPTION

- ❑ Seismic Installation

VIDEO OPTION

- ❑ High Definition Video (STERIS HD - Ready)
  - ❑ Factory Upgrade
  - ❑ Field Upgrade

STANDARD ACCESSORIES

- ❑ Additional Sterile Disposable Lighthandle Covers
- ❑ Additional Sterile Disposable Monitor Handle Covers
- ❑ Additional Lighthandles
- ❑ Green Ambient Light
- ❑ Secondary Spindle Mount
- ❑ Standard Definition (SD) Camera Module (refer to SD793)
- ❑ High Definition (HD) Camera Module (refer to SD930)
- ❑ SD-to-HD Retrofit (Field Upgrade Only)
- ❑ Single Flat Panel Monitor
- ❑ H-Frame Track System Adaptor
- ❑ Fiber Optic Connector Kit
- ❑ Traditional Copper Connector Kit (with Tooling)
- ❑ Traditional Copper Connector Kit (without Tooling)
- ❑ STERIS (12V dc, 180W) Power Supply Kit
- ❑ Video and Power Connectors (Various)
- ❑ STERIS Integration Services
- ❑ STERIS ACT Interface

Item _____

Location(s) _____

_____

_____

DESCRIPTION

The Harmony LED Surgical Lighting and Visualization System is a modular lighting system, providing high quality illumination for surgical and diagnostic applications. Harmony LED lightheads provide cool, shadow reduced, color corrected lighting. Lighting intensity is monitored and controlled from a wall mounted microprocessor-based Harmony LED Control Center. In addition to lighthead intensity control, the wall control monitors and operates camera features; and monitors overall system diagnostics. Light intensity level can be adjusted by the surgeon, or other sterile surgical team members, using control push buttons on the system lighthead. Illumination pattern size for either Harmony LED 585 lighthead or LED 785 lighthead is varied by rotating lighthead lighthandle.

The Harmony LED system can be configured to meet the needs of a wide variety of applications ranging from simple diagnostic procedures to outpatient surgery centers, as well as major surgical suites in large teaching hospitals. Available configurations include one, two or three lightheads (on one mount) or a four lighthead system (on two mounts). The Harmony LED lighting system may be configured for effective use in exam and treatment rooms, hospital emergency departments and hospital intensive care units.

The Harmony LED system is designed to support a variety of video and control signals transmitted either through traditional copper or multimode fiber optic cabling within optional video monitor arms. The system can include up to four fiber optic enabled video monitors.

The Harmony LED lighting system is designed to replace existing surgical lights, or to be installed as part of major renovations to existing facilities or in new facilities. The ceiling mounting plate is designed for compatibility with existing installations. The suspension system is capable of providing continuous 360° rotational positioning. (The Harmony LED 585 or LED 785 lightheads can be retrofitted to existing Harmony LA systems equipped with Harmony LA 500 or LA 700 Lightheads.)

STANDARDS

All components of the lighting system meet the applicable requirements of the following standards and/or regulations, and carry the appropriate symbols:

- **International Standard: IEC 60601-1:** Medical Electrical Equipment. Part 1: General requirements for safety. Third Edition, 2005.
- **International Standard: IEC 60601-2-41:2009, Second Edition: Medical Electrical Equipment, Part 2-41:** Particular requirements for the safety of surgical luminaires and luminaires for diagnosis.
- **CAN/CSA C22.2 No. 60601-Third Edition**
- Uniform Building Code, Vol. 1, 1997 and International Building Code, 2000.
- **ANSI/AAMI 60601-1:2005.**
- **IEC 60601-1-2:2007**
- **IEC 60601-1-4 Medical Electrical Equipment – Part 1-4:** General requirements for safety – Collateral Standard: Programmable electrical medical systems. First edition, 1996.
- **Electromagnetic Compatibility EN 60601-1-2:2001.**
- **Directive 93/42/EEC** (Medical Device Directive).
- **AAMI 11607: 1997,** Packaging for Terminally Sterilized Medical Devices (Sterility).

NOTICE: *This product contains a Class I laser product: No known biological hazard. The light is shielded from any possible viewing by a person and the laser system is enclosed and requires a tool to access Fiber Optic connections.*

- Equipment provided and incorporated by STERIS Corporation into complete Optical Fiber Communication System (OFCS) satisfies applicable laser safety requirements of the **IEC 60825-1 (Class 1 Laser Product)** and **IEC 60825-2 (Hazard Level 1M for OFCS)**.

FEATURES

WaveLens Technology enables a wide range of pattern size adjustment while maintaining excellent uniformity of illumination across the beam. Each lighthead provides color corrected, naturally appearing white light with a general color rendering index (CRI) up to 96 and a deep saturated red color rendering index (Ra) up to 98, and a color temperature of 4400 (±300) Kelvins. LED emitters are designed to emit light in the visible spectrum, with little or no ultra-violet and infra-red light. LED-emitted light reduces heat on surgical field for increased patient safety and improved surgical team comfort

Illumination intensity for the Harmony LED 585 lighthead can be adjusted up to approximately 160,000 lux (14,800 fc), by using the surgeon's push button controls located on the handle bezel, or from the control center. Illumination intensity for the Harmony LED 785 lighthead can be adjusted up to approximately 160,000 lux (14,800 fc), using the same controls. Each lighthead features individual intensity control, but all lightheads on a single system can be turned off simultaneously from any one lighthead. The operator can adjust the pattern size for Harmony LED 585 lightheads during a procedure by rotating the lighthandle. Harmony LED 585 lighthead pattern sizes are adjustable to diameters between 7" (178 mm) and 11" (279 mm); while Harmony LED 785 pattern sizes are adjustable to diameters between 8-1/2" (216 mm) and 12" (305 mm). Each lighthead is also equipped with a continuous non-sterile grasping surface for positioning the lighthead.

The lightweight suspension system is designed to allow frequent lighthead positioning through a wide range of motion without binding or drifting. The suspension system also features low-height lighthead positioning, allowing for low lateral illumination:

- Harmony LED 585 can be positioned 30-3/4" (781 mm) from the floor.
- Harmony LED 785 can be positioned 25" (635 mm) from the floor.

Harmony LED lighting system is built using a modular suspension. State-of-the-art electrical connectors allow lighthead reconfiguration within the limits of the installed suspension arms. Lightheads can be removed and replaced as required, or individual lightheads can be replaced with an upgraded version.

Harmony LED Control Center produces direct current voltage to each lighthead in the system. The intensity of each lighthead can be remotely adjusted to one of seven discrete levels, or can be turned off completely. Each lighthead is identified by

an easy-to-read number on the display screen of the wall control. The number is duplicated on the suspension system for the appropriate lighthead. Control center operates on 50/60 Hz ac, single phase service. Control center is compatible with the following ratings: 100 - 240V ac, 6 - 3 A. Current leakage is limited to less than 2 mA for standard control center.

For low-profile control center installations, or where three or four lightheads are controlled from the same Harmony LED standard-mount control center, a remote power module must also be used. The remote power module contains power supplies for the additional lightheads, and is provided with a service-accessible enclosure designed for either wall or above ceiling installation.

A combined traditional copper/multi-mode fiber optic cable bundle is provided within video-enabled systems to support various Customer-defined video options. The cable bundle also provides cabling to supply high voltage, low voltage (or both) power to video monitors (selected by the Customer) to be used within the system. Video transmitter/receiver pairs (modems), optional power supply and various power and video connectors are also available from STERIS to support various high-definition fiber optic video applications.

Each system lighthead is capable of accepting the optional STERIS standard definition (SD) camera module. The lighthead lighthandle is replaced by the SD camera module (plug and play). Refer to SD793 for SD camera module information.

High definition (HD) video capability is available for the lighting system and must either be ordered specifically at the time of sale, or (for pre-existing systems) added in the field. Refer to SD930 for information about the STERIS HD camera module and STERIS HD-Ready system.

NOTE: For HD-ready systems, only the lowest lighthead in the system (lighthead #1) is capable of transmitting HD video signals.

CONSTRUCTION

Each Harmony LED 585 and LED 785 Lighthead is constructed of lightweight, durable materials.

The Harmony LED 585 and LED 785 lighthead optical system consists of multiple Light Emitting Diode (LED) light sources, Total Internal Reflection (TIR) optics and Harmony Wave Lenses. The Harmony LED 585 and LED 785 lightheads are fitted with multiple module assemblies mounted to and aimed from a precisely machined aluminum cover. Each module is mounted with three (LED 585) or six (LED 785) individual LED emitters coupled with a TIR optic. This state-of-the-art design provides for brilliant, though cool, illumination and a usable LED life of approximately 60,000 hours.

Harmony LED Wave Lenses are made from an optical grade, shatter-resistant polycarbonate material. Lenses are sealed into the lighthead to prevent accumulation of dust on system optics.

The lighthead is mounted to a combined horizontal and spring arm assembly (suspension arm), which rotates around a main spindle. Suspension arm assemblies are specifically designed to support lightheads. The main spindle is attached to the ceiling plate, which mounts to the facility's above-ceiling support structure (support structure is not supplied by STERIS). The main spindle contains a precision bearing allowing continuous 360° rotation of the extension arms. Each suspension arm supports one lighthead. Lighthead spring arms also provide continuous 360° rotation and an adjustable counterbalance mechanism for effortless vertical positioning. Electrical commutators located within the suspension system transmit power and control signals while providing continuous rotation. All rotation points include adjustable brakes to prevent drift.

FIBER OPTIC ENABLED VIDEO SUPPORT ARMS

Hospitals and clinics often require advanced audio-visual support in proximity to the patient surgical site at or near the sterile field. Depending on the area of the facility in which they are working, and the specialty they are performing, hospital staff may require the use of multi-monitor feeds. The monitor support options provided by the Harmony Fiber Optic Enabled Surgical Lighting System are suited to both specialty, general-purpose operating rooms and all critical care areas; and are intended to augment all the lighting needs within a hospital. Flexibility and leading performance characteristics make these video monitor support arms useful and function across a wide range of potential applications, from the largest teaching hospitals to the smallest surgical facility.

Harmony monitor support arms can be mounted on the Harmony suspension system for convenient, efficient use of operating room space. Separate arms (up to two) are used to support flat panel monitors (up to four).

Harmony monitor configurations on the main support spindle include:

- One or two monitor arms with a two lighthead system, or
- One monitor mount with a three lighthead system.

Monitor arms are supported by the main spindle, or on an auxiliary secondary spindle.

Traditional copper and multi-mode fiber optic cabling supplied with monitor arm supports transmission of various types of video and control signals. These signals include, but are not limited to, the following:

- Composite
- S-Video
- VGA/RGBHV
- DVI-D
- HD-SDI
- RS-232
- RS-422

Table 1. Fiber Optic Enabled Lighting System Video Modems

Type	Max. Output / Channel		Channels	Wavelength	Notes
	(dBm)	(mW)		(nm)	
SDI	+7dBm	5.01	1	1310	Sources of radiation - self-contained, Class 1 Laser Products
S-Video	0dBm	1.0	1	1310	
VGA	+3dBm	2.0	3	1310	
DVI	-3.6dBm	0.44	4	850	

VIDEO TRANSMITTERS/RECEIVERS (MODEMS)

To facilitate high-definition video transmission, STERIS provides four video modem types for integration into the Harmony LED Surgical Lighting and Visualization System:

- HD-SDI
- S-Video/Composite/Audio
- VGA/RGBHV
- DVI-D (Single link)

These modems are provided in pairs (transmitter and receiver).

To maintain Hazard Levels (1M or less) and safety measures established by STERIS, end user must assure that any laser device integrated into the system and supplied by sources other than STERIS does not exceed the optical radiation power (per wavelength) of corresponding STERIS transmitters listed in **Table 1**.

It is the responsibility of the end user to ensure any device not supplied by STERIS corresponds to the values listed in **Table 1**.

VIEWING

Monitors tilt independently to suit the needs of different viewers. The monitors may be mounted in a landscape or a portrait orientation to best facilitate the information displayed on the screen. The monitor yoke rotates 320° about the end of the spring arm. This monitor spring arm features expanded upward range of motion (standard 20° upper stop can be changed to 30°, or 40° upper stop point).

Counterbalance plates (weights) provided inside the dual flat panel yoke housing compensate for variances in monitor weights.

Vented dual yoke housing provides a cooler installation environment for monitor power supplies. Optional fixed or rotating rear covers are available to enclose monitor signal and power wiring.

Convenience switches can be wired into monitor power circuits to allow ON/OFF control from the dual yoke housing when optional rear covers restrict access to monitor power switches. (Optional wiring service provided by STERIS.)

Locking hardware prevents monitors from inadvertent portrait-to-landscape rotation when fixed rear covers are used.

High and low voltage wiring arrangements are provided by STERIS. A separate “empty-arm” solution is available for Customers who wish to work with a third-party video integrator. (Optional wiring service provided by STERIS.)

For system configurations designed and installed by third-party video integrators; narrowest restriction in suspension wire way is 0.61" (15.5 mm) in diameter. An additional access door has been designed into monitor arms to aid installers in installing and customizing video configurations.

OPTIONS

Harmony LED lighting fixtures can be installed to conform with most seismic installation requirements.

INSTALLATION

A mounting plate is provided for installation to an above-ceiling support structure (support structure is not supplied by STERIS). An injection molded canopy is also furnished to conceal the ceiling plate; a flexible gasket seals the gap between the canopy and ceiling. Standard wall-mounted control center extends approximately 4-1/2" (114 mm) beyond wall surface. Low-profile control center extends approximately 1-1/4" (32 mm) beyond wall surface. Electrical connections are not provided by STERIS.

STANDARD ACCESSORIES

The sterile disposable cover used on the standard lighthead handle allows members of the surgical team to grasp and adjust the standard lighthead handle, while allowing access to all surgeon's lighthead controls.

A separately-available sterilizable sleeve, with a flexible membrane window, can be purchased to allow the surgeon access to lighthead-mounted controls during procedures.

The ambient light provides low-level, general illumination in the surgical suite. Illumination from the ambient light fixture can be configured to operate manually (turned on or off at the Harmony LED Control Center), or the ambient light can be configured to operate automatically (turns off when any system lighthead is turned on and turns on when all system lightheads are turned off). When configured for automatic operation, the ambient light can still be manually turned on or off at the control center. An optional ambient light fixture can be installed at the system hub. The ambient light sheds low-level green light.

Battery backup allows the lighting system to automatically switch to hospital 24 Volt dc emergency power supply in the event of AC power interruption. Emergency dc power supply is provided by a third party. The STERIS ACT Interface permits networking of the Harmony LED with various third-party control systems. These systems provide surgeons with direct control over many Harmony LED lighting and visualization functions using simple verbal commands and/or touch screen displays.

PREVENTIVE MAINTENANCE

A global network of skilled service specialists can provide periodic inspections and adjustments to help ensure more efficient performance. STERIS representatives can provide information regarding annual maintenance agreements.

STERIS also provides complete video integration services.

SUPPORT STRUCTURE

The ceiling structure – installed by a third party prior to lighting system installation – must be level and must adequately support the surgical light system configuration to be installed. The maximum loads and moments for a Harmony LED system with one, two, three, or four Harmony LED 585 or Harmony LED 785 lightheads installed are listed in the equipment drawings. See table below for equipment drawing numbers.

NOTES

Important: Reference equipment drawings for detailed installation requirements. This document is not intended as a complete pre-installation or planning guide.

1. Ceiling structure must adequately support surgical light system which weighs and exerts a moment as indicated in the equipment drawings (see table below).
2. Leveling nuts (not provided by STERIS) compensate for ceiling irregularities.
3. Fixture must be grounded. Adequate ground must be provided by running a separate ground wire to ceiling structure.
4. STERIS recommends general illumination in operating room of 2152 lux (200 footcandles) at the surgical site.
5. Power Requirement: Harmony LED Control Center; refer to equipment drawings for specifics.
6. Explosion Hazard: Do not use in the presence of flammable anesthetics.

UTILITY REQUIREMENTS

CUSTOMER IS RESPONSIBLE FOR COMPLIANCE WITH APPLICABLE LOCAL AND NATIONAL CODES AND REGULATIONS.

Electricity – Control Center is compatible with the following ratings: 100-240 Vac @ 6 - 3 Amps, Current leakage is limited to less than 2 mA for Standard Control Center.

Typical lighthead power consumption is 40 W for LED 585 and 200 W for LED 785.

MOUNTING ARRANGEMENT

Harmony Lighting Systems are mounted to a ceiling plate provided by STERIS. Ceiling plate is attached to an above-ceiling support structure (not provided by STERIS) located per STERIS recommendations (see equipment drawings for specifications and details).

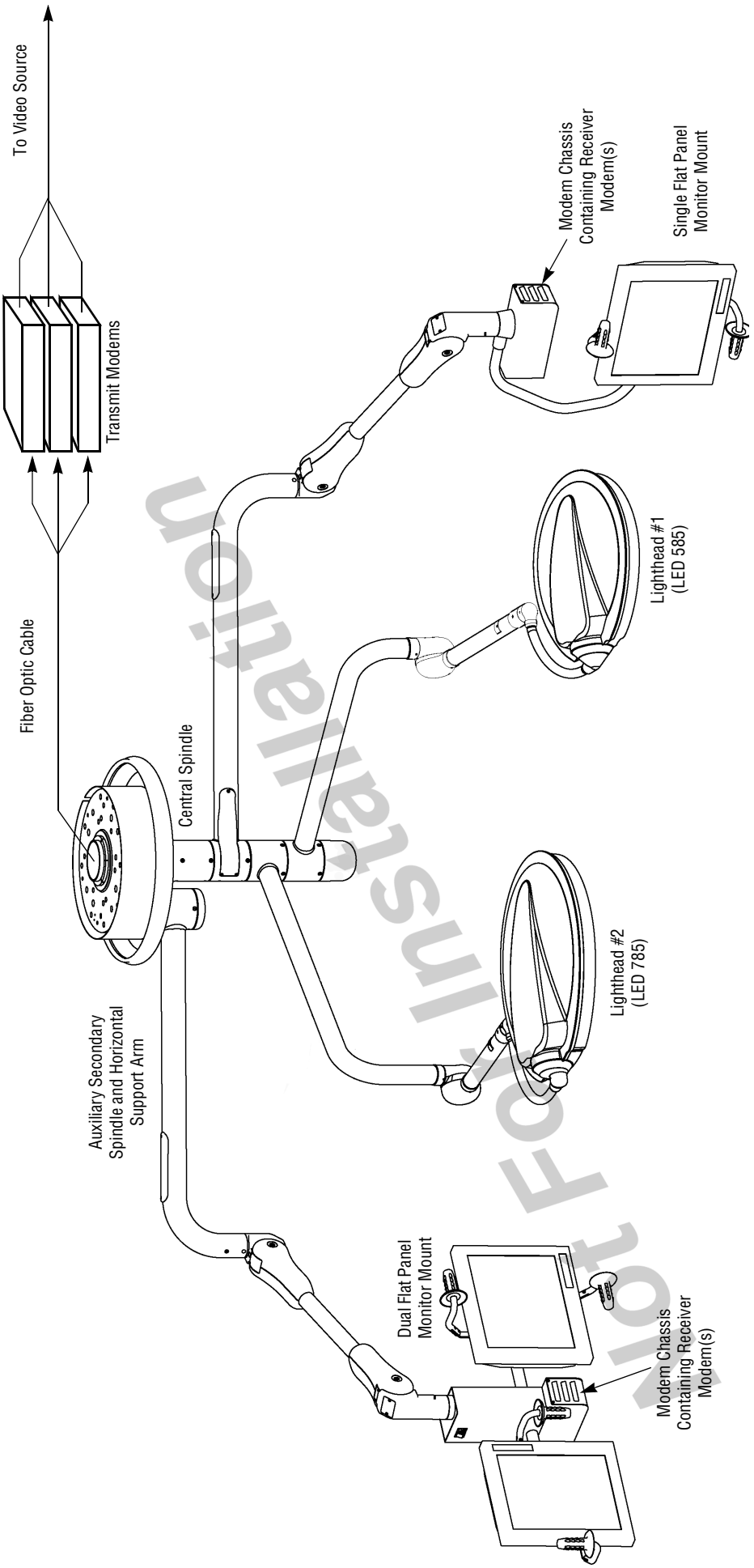

Typical System Overview

Not For Installation

Harmony Control Center

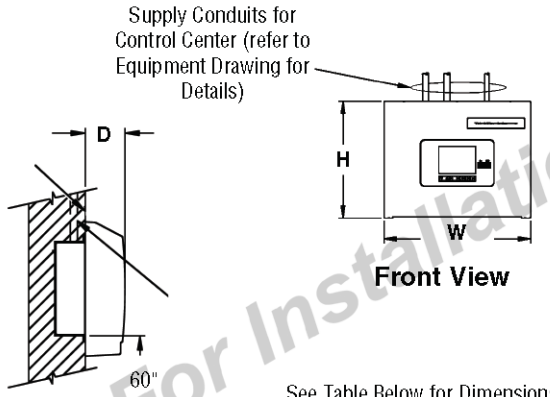

See Table Below for Dimensions

	H	W	D
Standard Profile	14-1/4" (362 mm)	17-7/8" (455 mm)	4-3/16" (107 mm)
Low-Profile	12" (305 mm)	11-1/2 (292 mm)	1-1/4" (32 mm)
Remote Power Module	13" (330 mm)	12-1/4" (311 mm)	3-3/4" (95 mm)

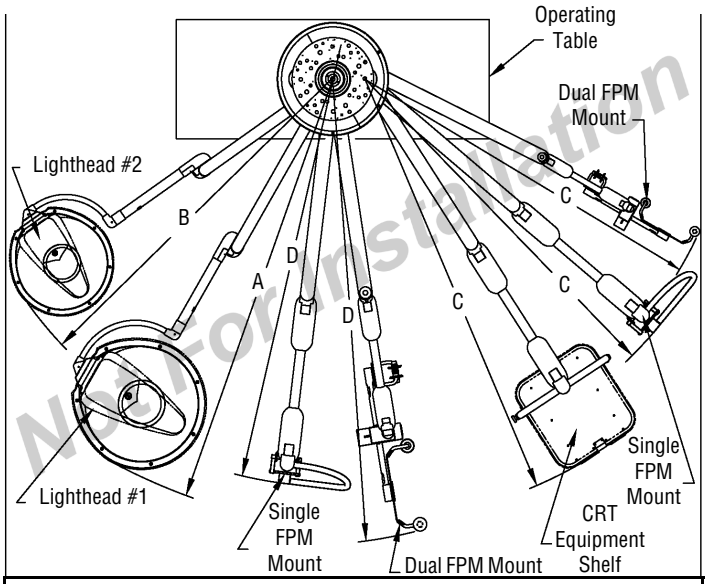

Lighthead	A (#1)	B (#2)
LED 585	95-1/4" (2419)	87-1/4" (2216)
LED 785	100-7/8" (2562)	92-3/4" (2356)

Monitor	C	D
FPM	87-7/8" (2232)	92-3/8" (2346)
DFPM	110" (2794)	114-1/2" (2908)

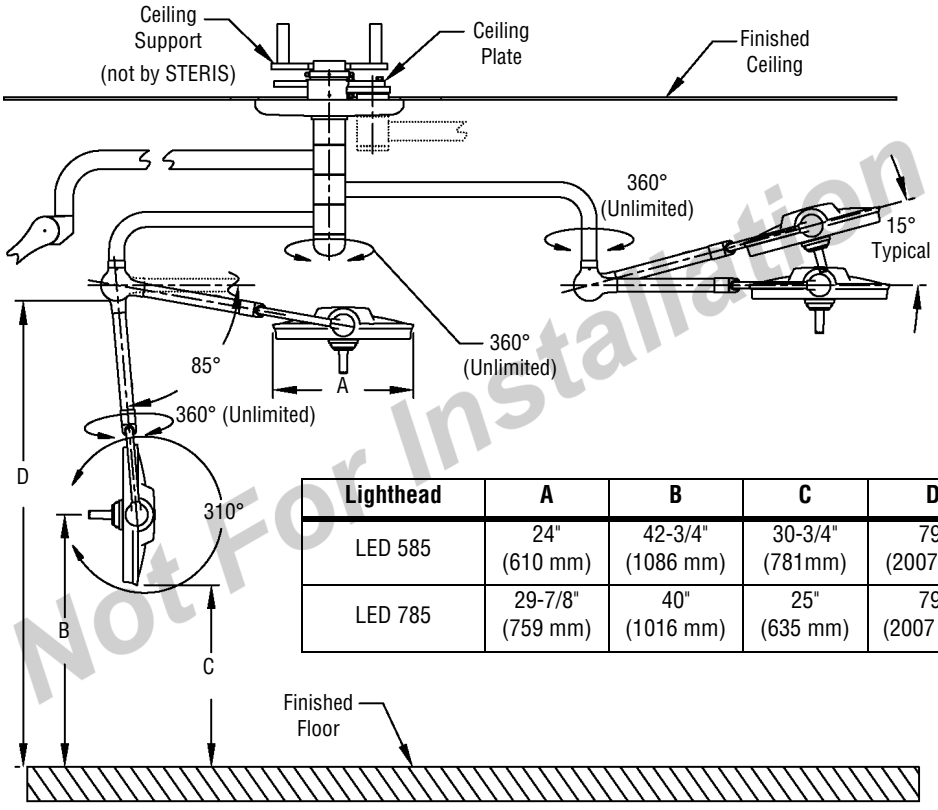

Lighthead	A	B	C	D
LED 585	24" (610 mm)	42-3/4" (1086 mm)	30-3/4" (781mm)	79" (2007mm)
LED 785	29-7/8" (759 mm)	40" (1016 mm)	25" (635 mm)	79" (2007 mm)

Not For Installation

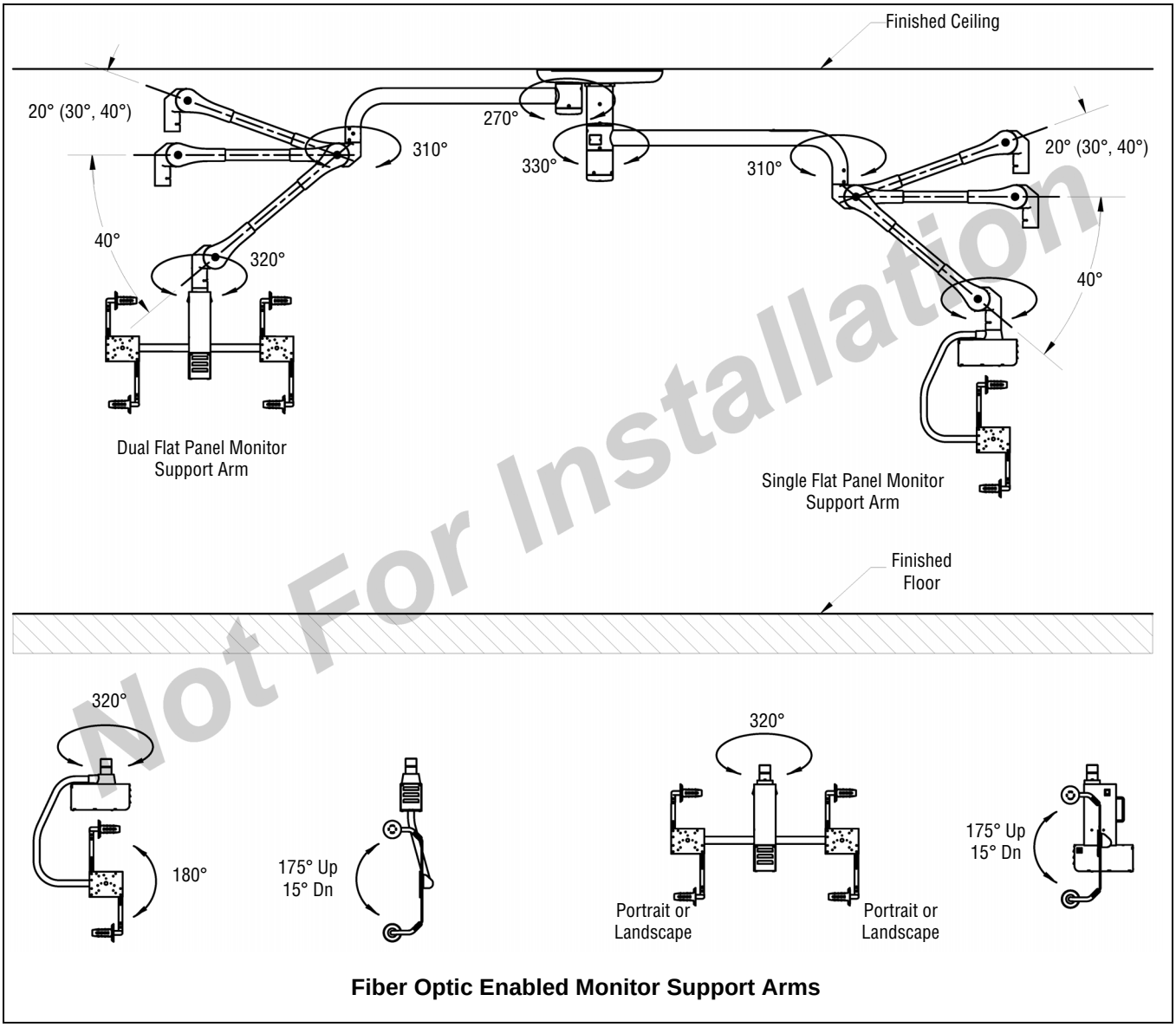

Fiber Optic Enabled Monitor Support Arms

Not For Installation

For Further Information, contact:

STERIS®

STERIS Corporation
5960 Heisley Road
Mentor, OH 44060-1834 • USA
440-354-2600 • 800-548-4873
www.steris.com

EC REP

STERIS Ltd.
Chancery House
190 Waterside Road
Hamilton Industrial Park
Leicester LE5 1QZ
UNITED KINGDOM

CE

SD878 © 2014, STERIS Corporation. All rights reserved. (10/01/14)

This document is intended for the exclusive use of STERIS Customers, including architects or designers. Reproduction in whole or in part by any party other than a Customer is prohibited.